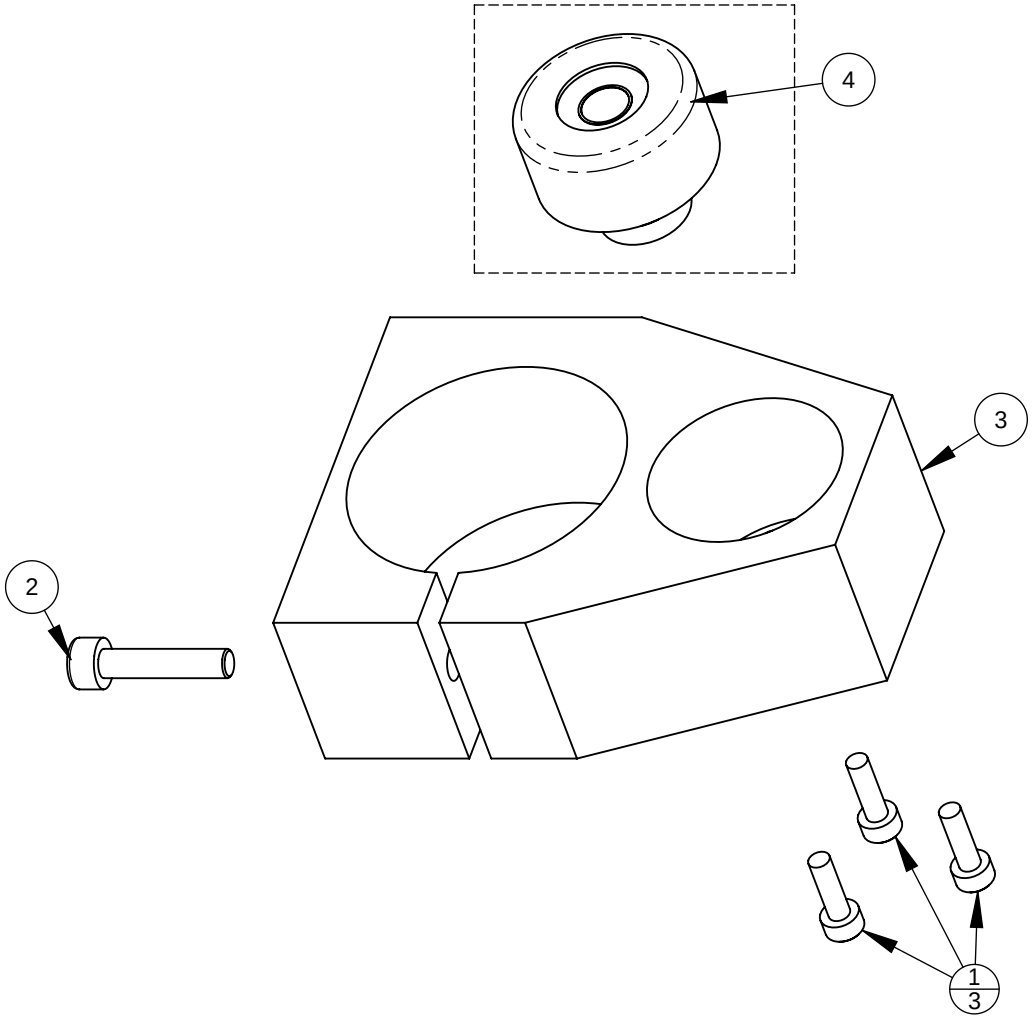

***NOTE**
Components may be sold separately.
Please see sub-assembly part number drawing for details.

ITEM NO.	PartNo	DESCRIPTION	QTY
1	3X10MMSH	SCREW,SOCKET CAP,3X10MM LONG	3
2	4X18MMSH	SCREW,SOCKET CAP,M4 X 18 LONG	1
3	5070-010	VIAL HOLDER,1-1/2"	1
4	5080-056	VIAL HOUSING ASSY, 10 MIN	1

5070-050	**VIAL HOLDER ASSY,10 MIN**	X/X ITEM#/QTY	**DATE:** 7/02/2003
			REV. A PAGE 1 OF 1

MANUFACTURING CO., INC.
4155 OASIS ROAD, REDDING, CA 96003