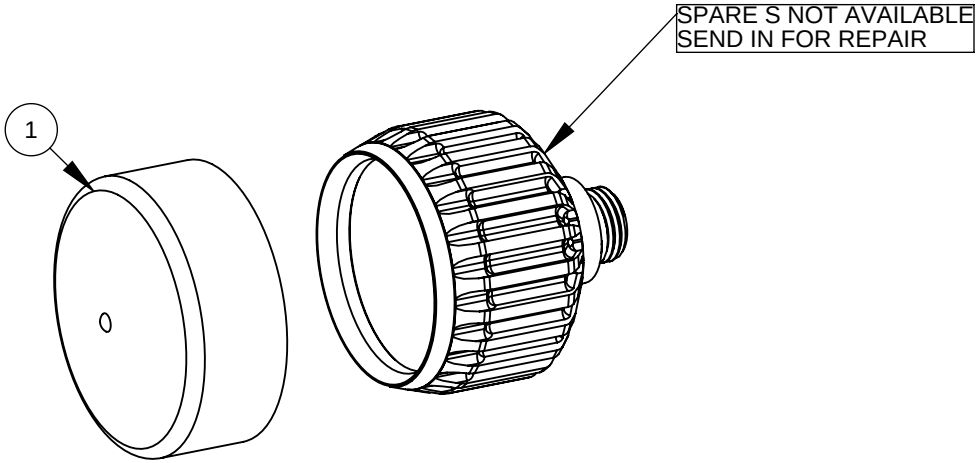

-XXX	COLOR
-FLY	FLO-YELLOW
-FOR	FLO-ORANGE
-YEL	YELLOW

***NOTE**
Components may be sold separately.
Please see sub-assembly part number drawing for details.

ITEM NO.	PartNo	DESCRIPTION	QTY
1	2040-003	COVER,PRISM,59.64	1

2040-XXX | **PRISM ASSEMBLY,POLY,58MM**

X X ITEM# QTY

DATE: 6/13/2008
REV. A | PAGE 1 OF 1

FECO MANUFACTURING CO., INC.
4155 OASIS ROAD, REDDING, CA 96003